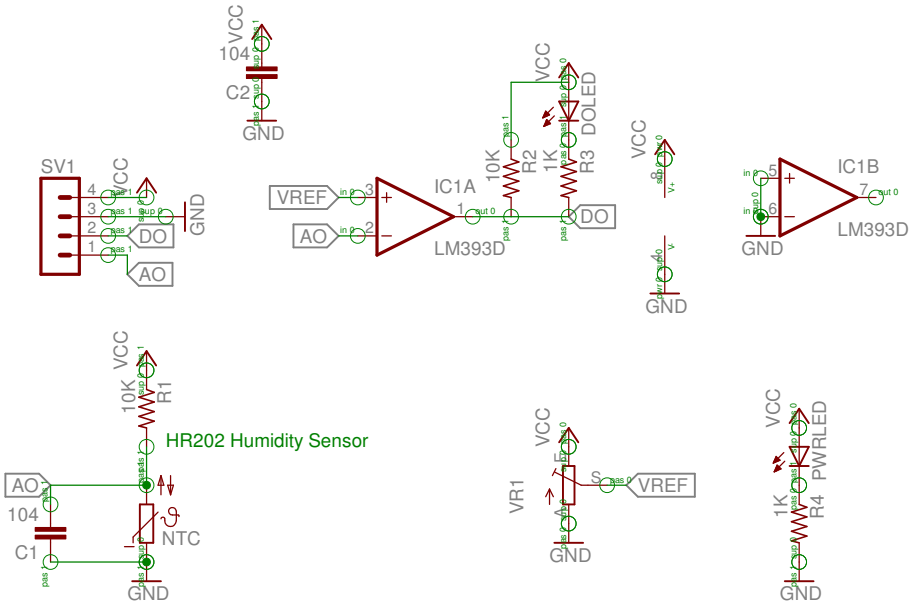

By Cytron Technologies Sdn. Bhd.
Date: Nov2012

TITLE: Temperature Sensor Module

Document Number:

REV:

Date: 11/9/2012 6:06:46 PM

Sheet: 1/1