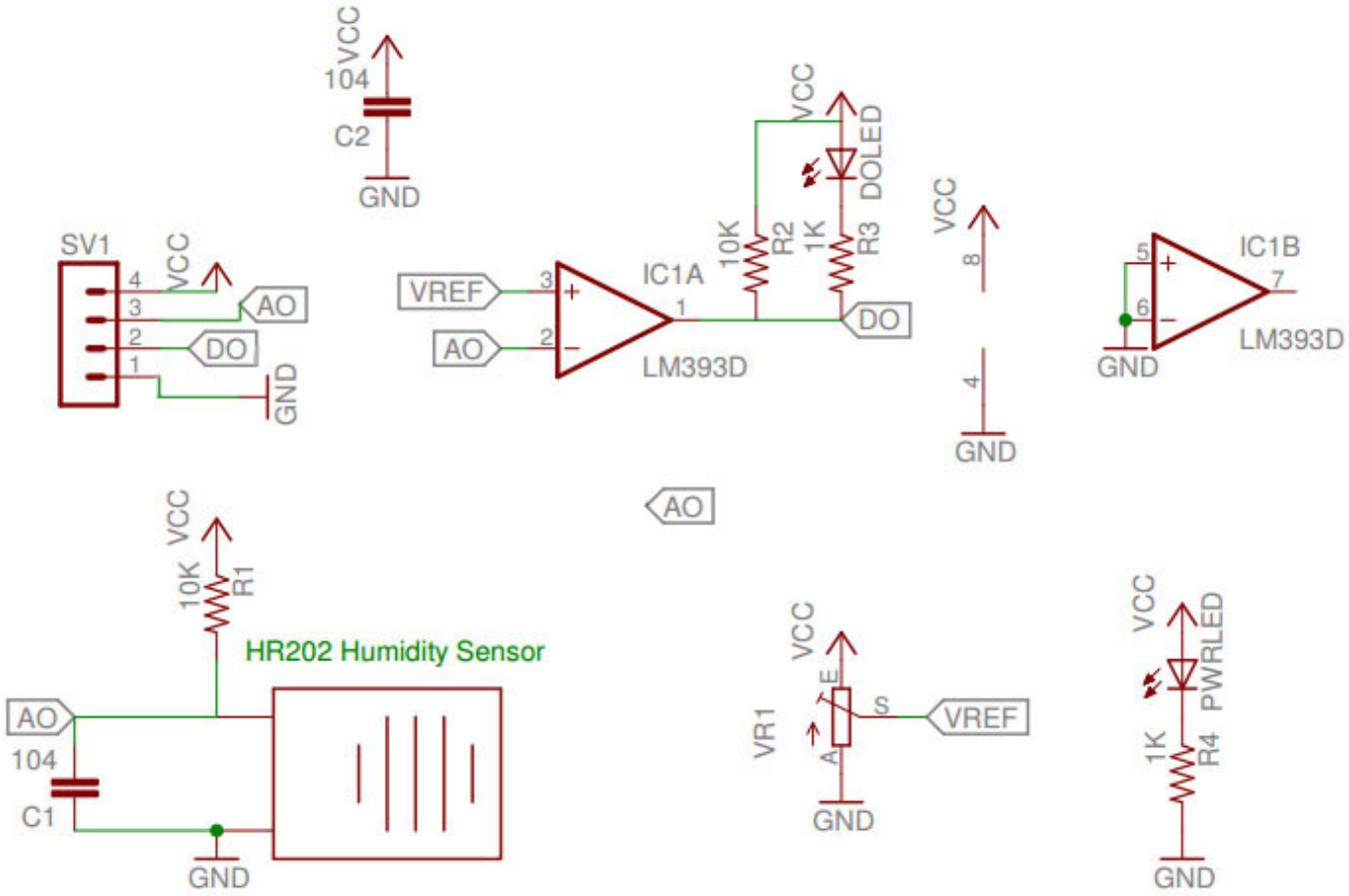
VCC
104
C2
GND
SV1
VCC
AO
DO
GND
VREF
AO
IC1A
LM393D
10K
R2
1K
R3
DOLED
VCC
DO
VCC
8
4
GND
IC1B
LM393D
GND
AO
VCC
10K
R1
HR202 Humidity Sensor
AO
104
C1
GND
VCC
VR1
E
S
A
VREF
GND
VCC
PWRLED
1K
R4
GND