Notes:

comm_pin1 = communication pin1
comm_pin2 = communication pin2

All pin above are communication pin between master card and slave card. To avoid confusion, all pin configuration for side connector are hidden.

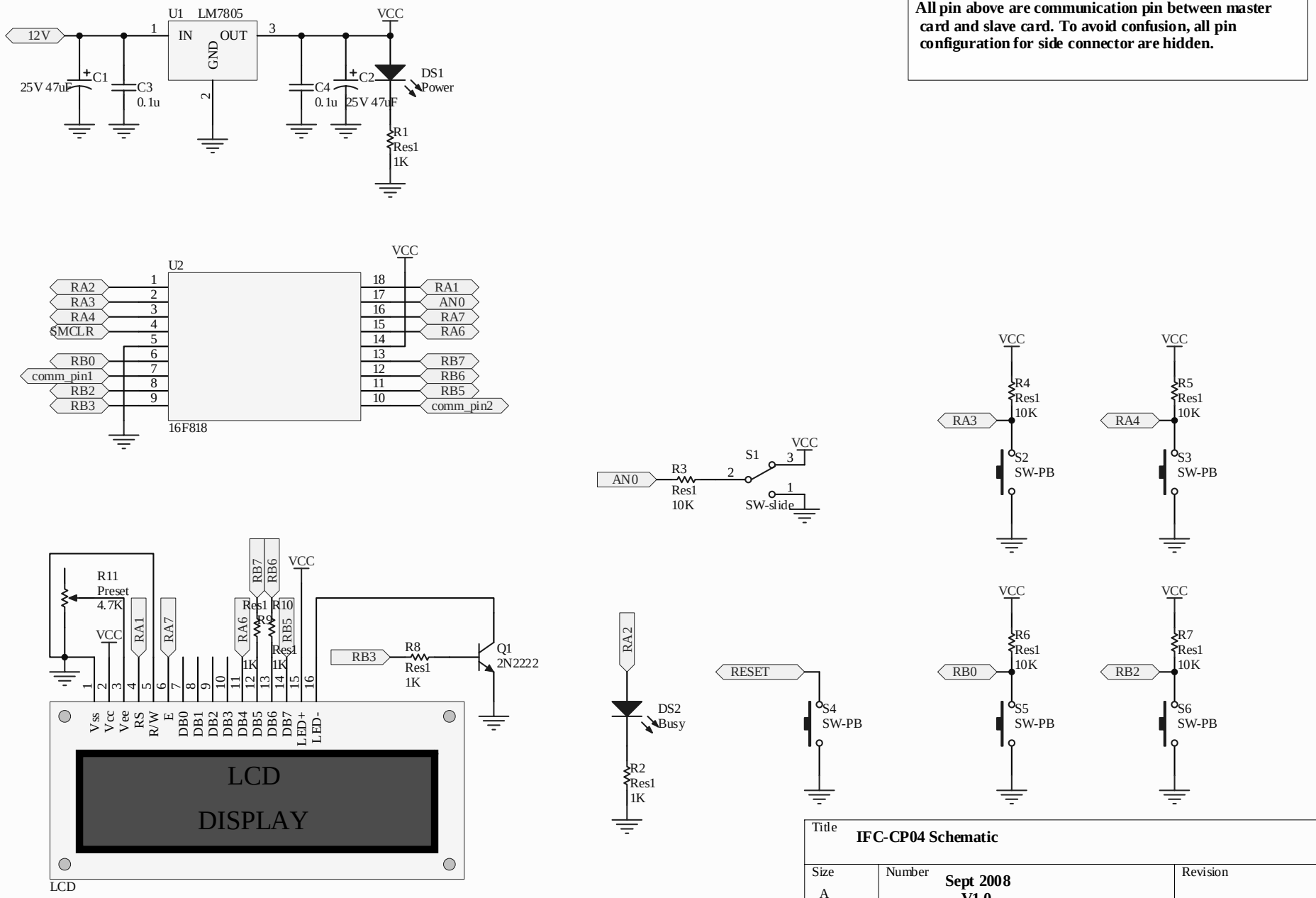

Title	**IFC-CP04 Schematic**	
Size A	Number **Sept 2008 V1.0**	Revision
Date: 10/10/2008		Sheet of
File: F:\Interface Free Controller\..\CP04 schematic.SchDoc		Drawn By: