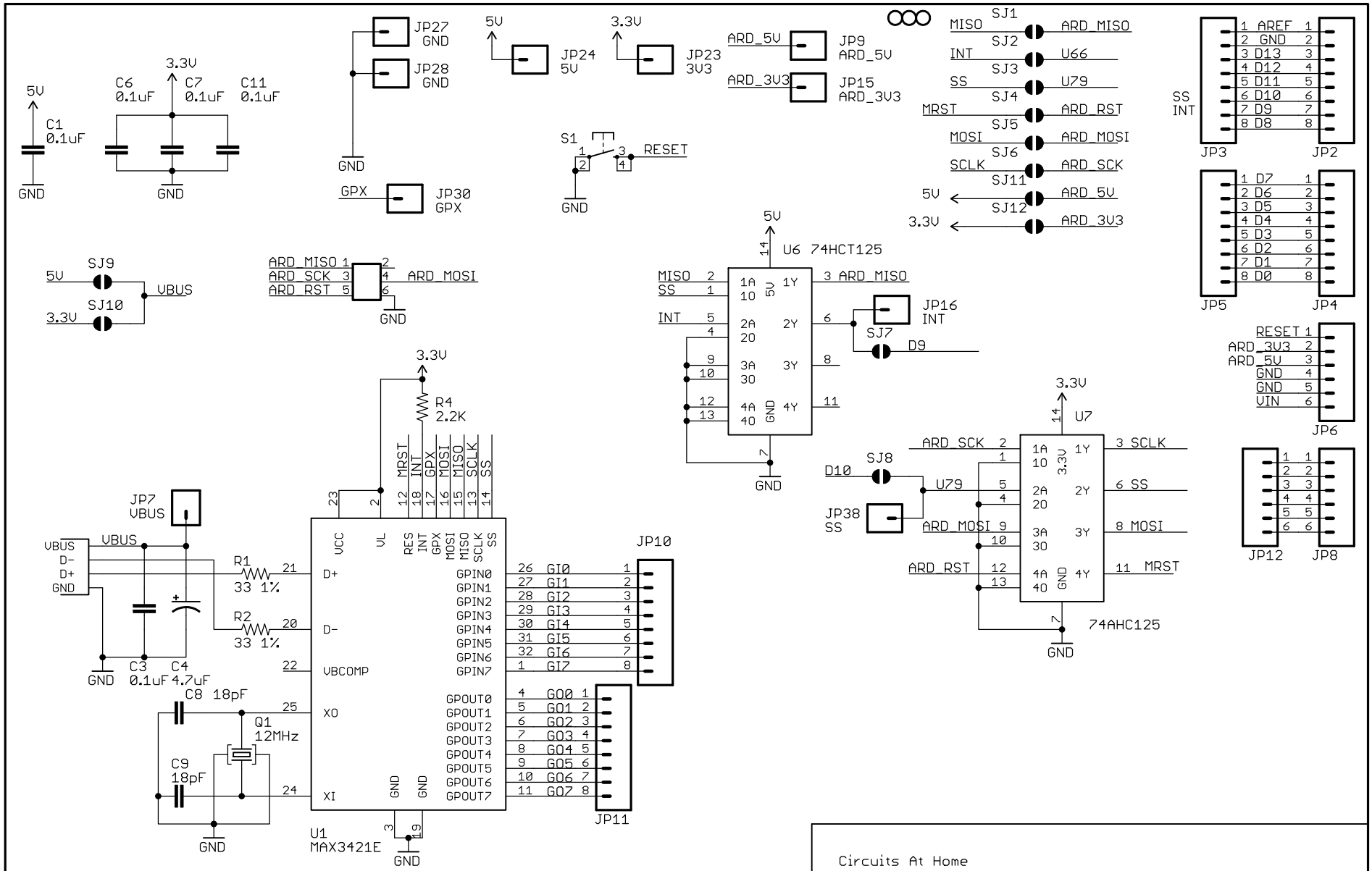

Released under Creative Commons
Attribution-NonCommercial-ShareAlike License
http://creativecommons.org/licenses/by-nc-sa/3.0
Copyright (c) 2011 Circuits At Home
All Rights Reserved

Circuits At Home

TITLE: UHS_20

Document Number:

REV: 1.0

Date: 2/8/2011 10:12:20 PM

Sheet: 1/1