SYNACORP TRADING & SERVICES
No.9, 1st Floor, Lrg 1/SS2, Bandar Tasek Mutiara, 14120 Simpang Ampat, S.Prai (S), Penang
Tel : +604.504.1617 Hunting Line : 012.4033.474 Fax : +604.502.1726
(Website) http://www.synacorp.my (Email) sales@synacorp.com.my

THE ELECTRONICS HOBBY KIT

5V REGULATED POWER SUPPLY (LM7805)

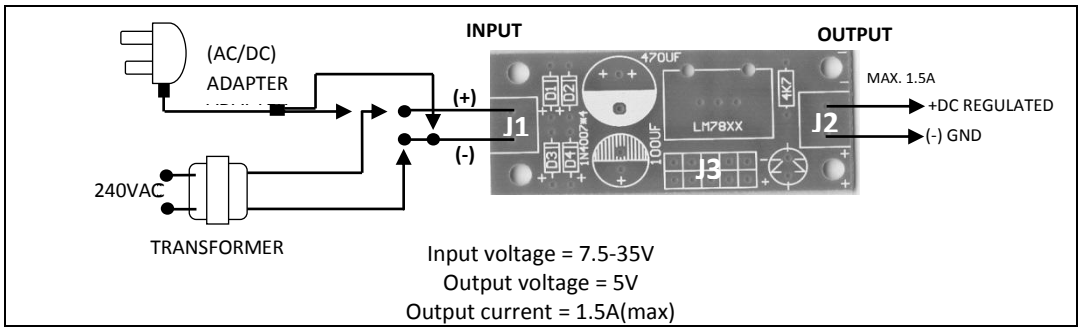

R1 = 4.7kΩ (YELLOW-VIOLET-RED)	
D1 = 1N4007 D2 = 1N4007 D3 = 1N4007 D4 = 1N4007	
C1 = 470uF (50V) C2 = 100uF (50v)	
L1 = 3mm LIGHT-EMITTING-DIODE (LED)	
U1 = 7805 (REGULATOR IC)	
Attn: HEATSINK NEEDED FOR U1	

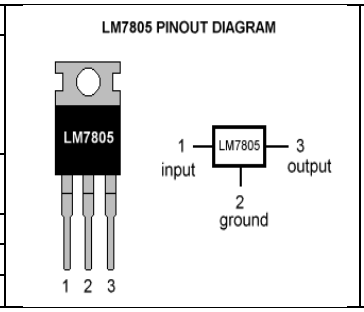

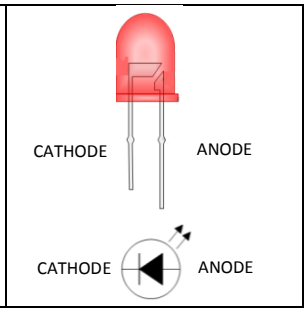

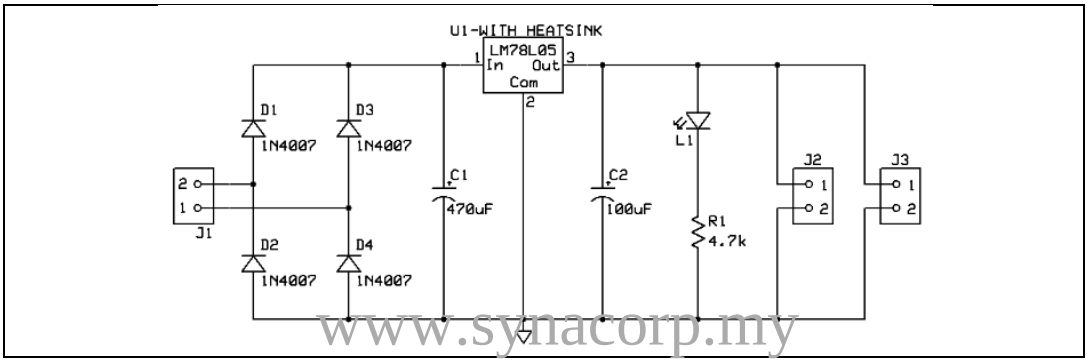

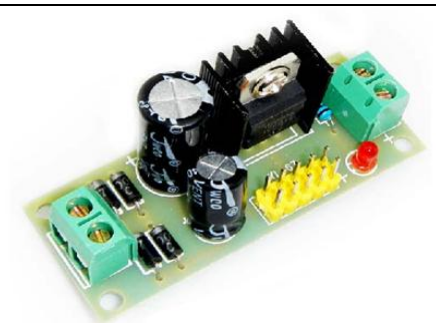

PCB Full Assembly